三相固態繼電器
3 PHASE SOLID STATE RELAY

K3P40C25AA
K3P40C40AA
K3P40C50AA
K3P40C75AA

型號索引說明 Model No. Descriptions:

K3P 40 C 25 A A

- K3 : 3 PHASE 固態繼電器
  K3: 3 PHASE SOLID STATE RELAY
- 負載電壓 20 = 280VAC
  40 = 480VAC
  Load Rated Operational Volage
  20 = 280VAC
  40 = 480VAC
- 控制方式
  Switching Type
  C=零點觸發
  C = Zero Cross
  R=隨機觸發
  R =Random Swithcing
- 安培數
  25= 25Amp , 40= 40Amp , 50=50Amp ,
  75=75Amp , 90=90Amp , 100=100Amp
  125=125Amp
- 控制電壓範圍 :
  Control Voltage :
  D = 直流輸入 (**6-32VDC**)
  D = DC input (6-32VDC)
  A = 交流輸入 (80~280VAC)
  A = AC input (80~280VAC)
- 負載電壓範圍
  Load rate operation voltage
  A = 交流負載 (24~280VAC)
  A =AC load (24~280VAC)

產品摘錄 PRODUCT SELECTON

輸出規格 OUTPUT SPECIFICATIONS

品名	Description	K3P40C25AA	K3P40C40AA	K3P40C50AA	K3P40C75AA
最大負載電流(25°C)	Max Load Current (25°C)	25A	40A	50A	75A
負載電壓範圍	Operating Voltage [VAC]	48-480	48-480	48-480	48-480
破壞電壓	Maximum Transient Overvoltage [Vpk]	1200	1200	1200	1200
洩露電流	Maximum Off-State Leakage Current @Rated Voltage [mA]	Less 10mAms	Less 10mAms	Less 10mAms	Less 10mAms
最大瞬間承受電流	Maximum Surge Current [Adc] (10ms)	250A	400A	500A	750A
動作壓降	Maximum On-State Voltage Drop @ Rated Current [Vdc]	1.5	1.5	1.5	1.5
瞬間電壓變化率	Maximum Off-State dv/dt [V/uSec]	1000	1000	1000	1000

輸入規格 INPUT SPECIFICATIONS

品名	Description	K3P40C25AA	K3P40C40AA	K3P40C50AA	K3P40C75AA
控制電壓範圍	Control Voltage Range	80-280V AC	80-280V AC	80-280V AC	80-280V AC
最小導通電壓	Minimum Turn-on Voltage	70VAC	70VAC	70VAC	70VAC
最小關斷電壓	Minimum Turn-off Voltage	10VAC	10VAC	10VAC	10VAC
輸入洩漏電流	Leakage Current	15mA	15mA	15mA	15mA
最大動作時間	Maximum Turn-on Time [msec]	Less 8.3m Sec	Less 8.3m Sec	Less 8.3m Sec	Less 8.3m Sec
最大關斷時間	Maximum Turn-off Time [msec]	Less 1/2A C cycle	Less 1/2A C cycle	Less 1/2A C cycle	Less 1/2A C cycle

一般規格 GENERAL SPECIFICATIONS

品名	Description	K3P40C25AA	K3P40C40AA	K3P40C50AA	K3P40C75AA
輸入/輸出至外殼絕緣電壓	Dielectric Strength , Input-Output Base (50/60Hz)	4000	4000	4000	4000
輸入/輸出絕緣電壓	Dielectric Strength , Input-Output (50/60Hz)	4000	4000	4000	4000
絕源電阻	Minimum Insulation Resistance	10^9ohm	10^9ohm	10^9ohm	10^9ohm
工作溫度範圍	Ambient Operating Temerature Range	-20°C~+80°C	-20°C~+80°C	-20°C~+80°C	-20°C~+80°C
儲存溫度範圍	Ambient Storage Temperature Range	-40°C~+100°C	-40°C~+100°C	-40°C~+100°C	-40°C~+100°C
觸發方式	Switching Type	Zero Cross	Zero Cross	Zero Cross	Zero Cross
重量	Weight (g) +/- 50g	400g	400g	400g	400g

GENERAL NOTES

(1) All parameters at 25°C unless otherwise specified
(2) Dielectric strength and insulation resistance are measured between input and output
(3) Heat sinking require ,for derating curves see next page.

等效電路圖 EQUIVALENT CIRCUIT

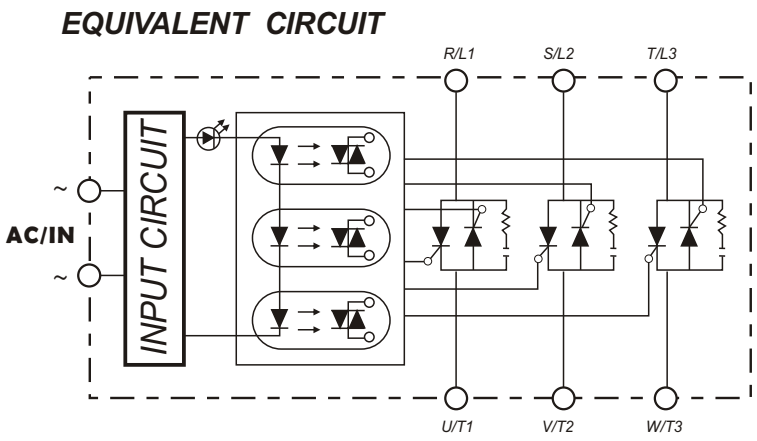

外觀尺寸圖 MECHANICAL DIMENSIONS (Unit: mm)

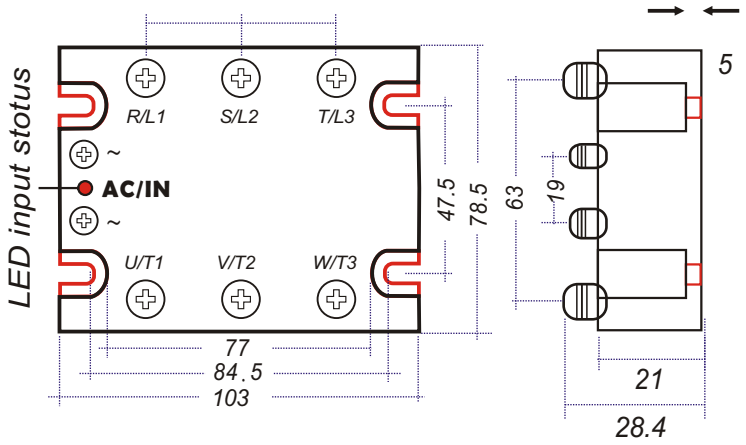

特性曲線圖 CHARACTERISTIC CURVES

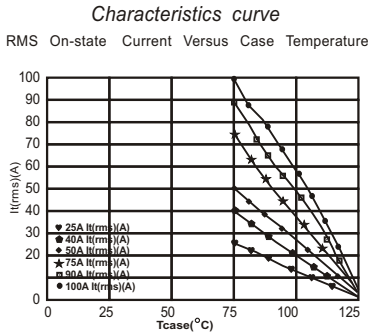

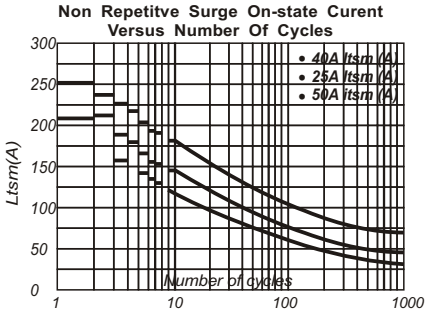
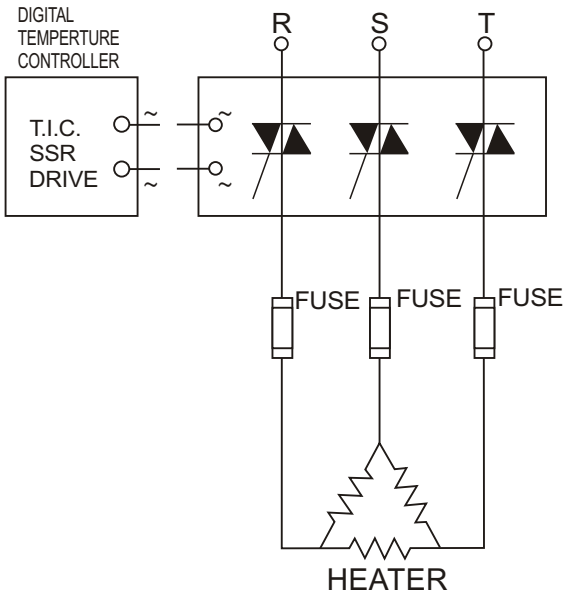
應用範例 EXAMPLE APPLICATION